Industrial End Suction BPO Pumps

Type DS

STERLING PUMPS

DS PUMPS

NOMENCLATURE

300 DS 45 2

- 2 — BEARING FRAME
- 45 — NOMINAL DIAMETER OF IMPELLER IN Cm.
- DS — PUMP TYPE.
- 300 — DISCHARGE DIAMETER (mm)

DS-pumps in accordance with ISO/DP 5199, efficient, multipurpose design for a wide variety of industrial services

Much more than purchase price must be considered in evaluating pumps. The total cost of a pump includes not only purchase price, but cost of installation, cost of operation, reliability, ease and frequency maintenance.

Over the useful life of a pump, operation and maintenance will represent by far the major share of the total cost. Whenever a pump is needed, it is worthwhile to carefully evaluate such factors as system flexibility, operating ease and efficiency, ruggedness of the individual components, simplicity of the overall design and ease of maintenance. Where a number of pumps are to be purchased, versatility, coverage and parts interchange ability gain in importance.

The DS pump welcomes such comparisons!

Designed and built for efficiency and dependability – backed by years of experience with every demanding service – DS is the pump line to choose over a broad range of applications and operating conditions.

Features that work for your benefit:

- Radially split, end-suction design is the optimum in versatility for medium-duty applications in all industries.
- Axial inlet with a choice of three alternate discharge nozzle locations provides system flexibility.
- Low NPSH requirements reduce system cost.
- High pump efficiency at part load as well as design point optimizes use of energy.
- Conservative loading of the solidly dimensioned components reduces wear, extends reliability and operating life.
- Good access to all parts, without disturbing piping or driver, minimises cost of maintenance.

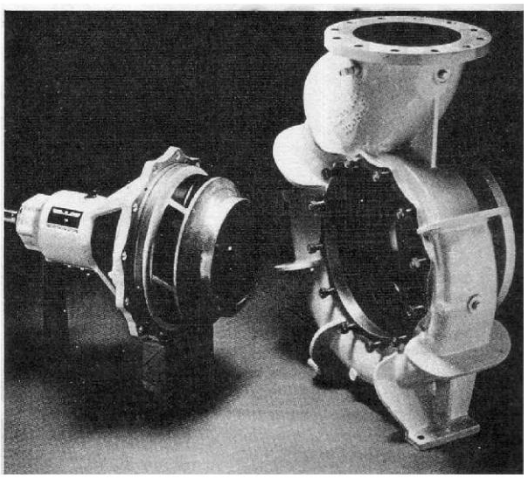

- Broad operating range of the line facilitates its application

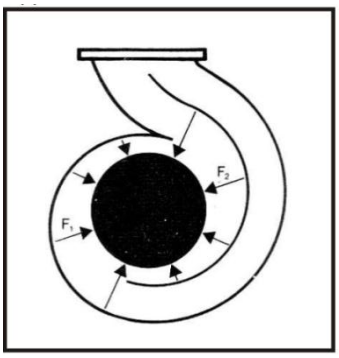

- Four standard material combinations are available, with options to meet varying conditions of service.
- Maximum interchange ability of components over a range of pump sizes reduces your spare parts stocking requirements.
- The double-volute casing of the DS pump line minimizes radial thrust and permits stable part-load operation. Radial components of the hydraulic forces, shown here as F_1 and F_2, act on the rotor, opposing and essentially balancing each other under all load conditions. This assures smooth running and reduces vibration as well as mechanical loading of all parts.

Excellent hydraulic coverage across a broad working range

- Capacities from 1500 to 25,000 USGPM
- Total heads from 70 to 350 ft.
- Power range from 75 to 2000hp

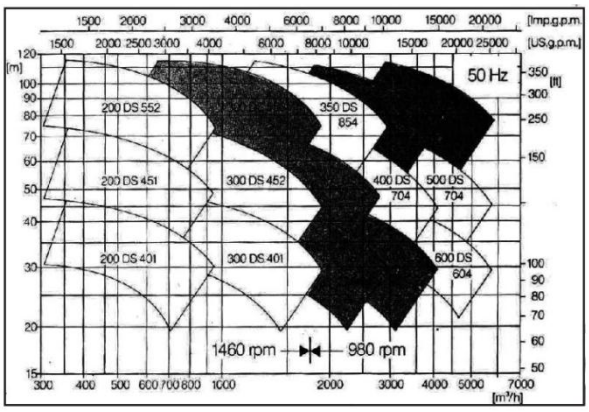

The broad coverage and application versatility of the DS line permit the use of a large number of DS pumps within an industrial complex. Extensive coverage provides a good selection at any design point.

Nomenclature developed for easy identification. The first three digits indicate the nominal size of the discharge nozzle in millimetres; the letters refer to the model; the next two digits indicate the nominal maximum diameter of the impeller in centimetres; and the last digit is the bearing bracket size reference.

Example: 350 DS 703

Type DS pump with 350mm discharge nozzle and 700mm nominal impeller-diameter, connected to a size 3 bearing bracket.

Maximum interchange ability of parts

The standardization of individual components within the line simplifies spare parts stocking.

For example, only five bearing bracket assemblies and six sizes of casing rings are required to cover the complete line.

The diagram below demonstrates the interchange ability of this comprehensive pump line:

Casing

Impeller

Casing Cover

Are separately sized for each pump size

Casing rings

Bearing bracket assemblies of the following components

- Shaft with shaft sleeve and impeller attachment
- Bearings with bearing covers and sealing rings
- Stuffing box with packing or mechanical seal.

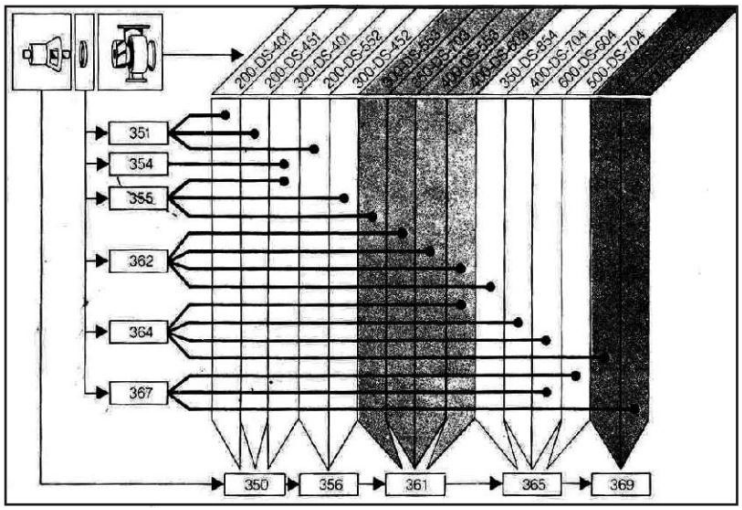

- Well-matched flow characteristics of pump casing and impeller assure maximum efficiency over a broad operating range.
- The closed impeller utilizes three dimensionally contoured blades extending into the impeller eye. This, proven computer design combines excellent efficiencies with low NPSH requirements.
- The closed impeller maintains its design flow characteristics even after a long service. A closed impeller also helps hold design efficiency and hydraulic balance over the entire operating temperature range without need for adjustment of axial clearance.
- Stop pieces in the casing suction nozzle assure good axial flow to the impeller eye even at part-load conditions, further reducing NPSH requirements.
- The impeller is attached to the shaft with a cap and positively locked bolt. This arrangement assures a positive connection without affecting fluid flow into the impeller. Impellers are dynamically balanced for smooth operation.
- Casing rings and impeller balance ports minimize axial thrust.
- The rigid shaft, in conjunction with the double-volute casing, keeps shaft deflection low over the entire operating range, reducing radial loading and promoting high sustained efficiency, operating economy and long life of shaft-seal, casing rings and bearings. Bearing life exceeds industry specifications for heavy duty. A further benefit of the rigid shaft: the first critical speed is more than double the operating speed.
- A stuffing box with five rings of packing and a split lantern ring provides an exceptionally dependable sealing arrangement. Flushing the lantern ring keeps air from entering the pump at low suction pressures and cools the packing.
- The shaft sleeve is extended beyond the stuffing-box gland and locked on the shaft by the impeller and impeller key. A metallic gasket on the shaft shoulder prevents leakage under the sleeve: a positive step towards corrosion prevention.
- A constant-level oiler maintains correct oil level in the bearing housing and prevents excessive churning which can lead to premature aging of the lubricant.
- A spacer type coupling allows full inspection of the back pull-out type pump in minimum time, without disturbing suction and discharge connections or driver position. All parts are easily accessible for maintenance without the use of special tools. The positively centered casing cover with O-ring seal greatly simplifies inspection.

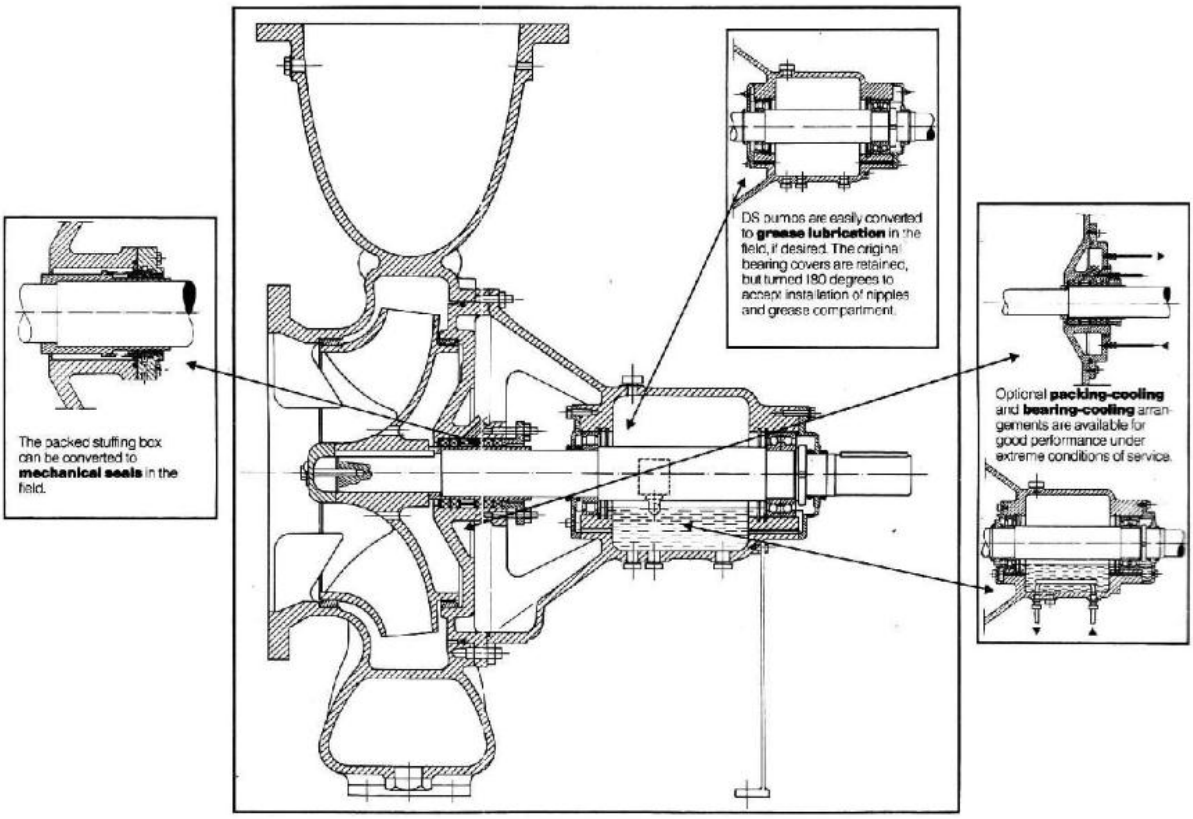
The packed stuffing box can be converted to **mechanical seals** in the field.
DS pumps are easily converted to **grease lubrication** in the field, if desired. The original bearing covers are retained, but turned 180 degrees to accept installation of nipples and grease compartment.
Optional **packing-cooling** and **bearing-cooling** arrangements are available for good performance under extreme conditions of service.

Materials of construction				
Part	**Standard**	**All Iron**	**All Bronze**	**Stainless Steel**
Casing	Cast Iron	Cast Iron	Bronze	18/10 CrNi-Steel
Casing Ring	Steel	Steel	Bronze	26/8 CrNi-Steel
Stuffing box Head	Nod. C.I.	Nod. C.I.	Bronze	18/10 CrNi-Steel
Impeller	Bronze	Cast Iron	Bronze	18/10 CrNi-Steel
Shaft	Steel	Steel	18/10 CrNi Steel	27/5 CrNi Steel
Shaft Sleeve1)	Bronze	Cast Iron	Bronze	26/8 CrNi-Steel
Shaft Sleeve2)	Bronze	13% Cr-Steel	Bronze	18/12 CrNi-Steel
Lantern Ring 1)	Bronze	Cast Iron	Bronze	18/10 CrNi-Steel
Gland 1)	Cast Iron	Cast Iron	Bronze	18/10 CrNi-Steel
Seal Cover 2)	13% Cr-Steel	13% Cr-Steel	Bronze	27/5 CrNi-Steel
Packing	Graphite impregnated Asbestos			to suit liquid handled
Mechanical Seal	Stationary Ring: Carbon Rotating Ring: 18/8/3 CrNi-Steel, stellited			to suit liquid handled
Bearing Frame	Cast Iron			
Bearings	Antifriction type, oil lubricated, grease lubrication optional			

1) For packing only
2) For mechanical seal only

Other material combinations upon request

Four standard material combinations are available to meet most conditions of service, resulting in improved production control and inventory and fastest possible shipments. More than 90% of all DS applications can be covered by these standard selections.

The standard combination meets most industrial requirements.

The all-bronze combination is used where the fluid to be pumped is not compatible with ferrous metals.

The stainless-steel combination meets most corrosive liquid applications in the chemical industry.

In addition to these standard combinations, other materials of construction can be supplied to match specific requirements. These include nodular iron or cast steel casings for higher discharge pressures.

Dimensions and Specifications

Standard flange ratings:
Size 200 DS 401

All other pumps:
ND 16 (DIN)

Flanges can be provided up to ND 40 (DIN), or up to 300 lb (ANSI).

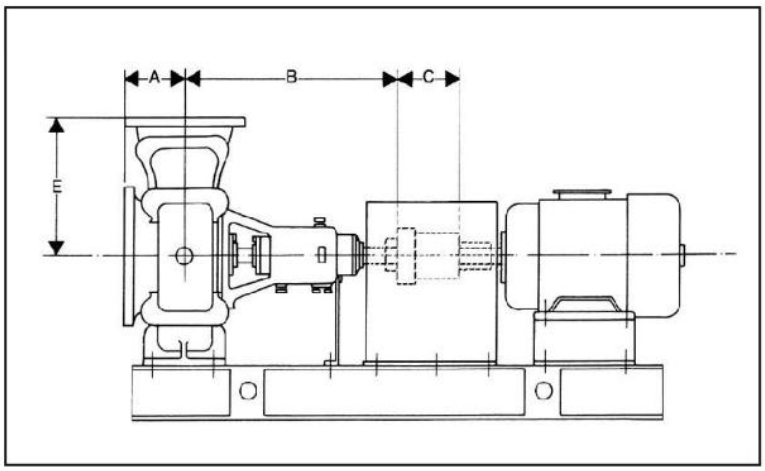

Shaft end dimensions are in accordance with IEC 72-1, equivalent to 748 (DIN). These standardized dimensions simplify matching with the motor shaft and allow the use of stock couplings.

Spacer type coupling allows the rotor assembly and bearing bracket to be removed from the rear of the casing, without dismantling pipe connections or changing driver position.

Size	Discharge Nozzle	Suction Nozzle	A	B	C	E	F_1	F_2	F_3
200 DS 401	200	250	200	615	180	500	400	450	330
200 DS 552	200	250	220	738	180	520	430	470	400
250 DS 401	250	300	250	623	214	540	410		

All dimensions in mm

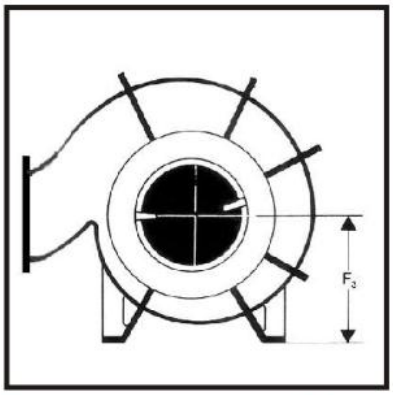

Three alternative discharge nozzle arrangements meet varying systems requirements.

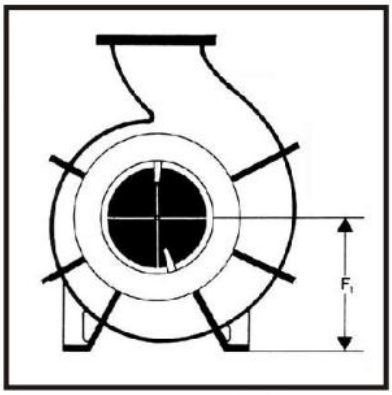

Centerline support of the horizontal pumps is available to meet extreme conditions of service.

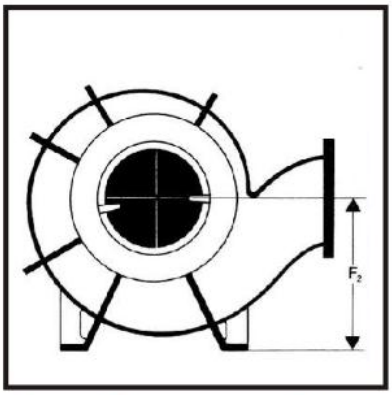

The DS line is also available in vertical arrangement.

Radial Split End-Suction Pump

Type: DS

Engineering Data

Pump Size	Frame No.	Size of Ball Bearing		Shaft Dia at Coupling (mm)	Shaft Dia under Sleeve (mm)	Rotor Data(1)		Dia. Clearance of Wearing Rings (mm)(3)(2)
		Thrust Bearing	Radial Bearing			Weight (kg)	Moment of Inertia wet ($kg.m^2$)	
200 DS 401	1	7212BG	NU212	48	60	57	0.3	0.5
200 DS 552	2	7212BG	NU215	60	75	96	1.9	0.5
250 DS 401	1	7212BG	NU212	48	60	118	2.6	0.5

1. Values are based on max. diameter impellers and are approximate.
2. Attention: These values "J" (moment of inertia) are not to be misinterpreted as GD^2 ($kp.m^2$)
3. These clearances are for cast iron or bronze rings. Other materials may require greater clearances and consequently a slight efficiency reduction.

Pump Size	Stuffing Box Data				
	Outer Dia. of Shaft Sleeve (mm)	Inner Dia. of Stuffing Box (mm)	Depth of Stuffing Box (mm)	Rings per Box *	Size Packing (mm)
200 DS 401	79	104	99	5	12
200 DS 552	89	114	99	5	12
250 DS 401	79	104	99	5	12

*. Seal Cage can be replaced by 2 additional rings of packing.

Typical Specifications

Each pump shall be designed to pump sewage containing solids and stringy materials with a minimum of clogging. Each pump shall be rated at m^3/hr at total head of mtr. at rpm. In addition, each pump shall be capable of producing not led than m^3/hr at a minimum total head of mtr at rated speed. Minimum shut off head shall be mtr. Variable speen pumps shall be capable of m^3/hr at a total head of mtr. at reduced speed of rpm.

Driver horsepower shall be min. so as to be non-overloading from shutoff to minimum head specified for full speed operation. Suction and discharge connection shall be inches minimum and the flanges shall be drilled in accordance with ANSI standards for B16.5 flanges.

Casing – The pump casing shall be of the one piece volute type with integral discharge flange and arranged as shown on the drawings. It shall be made of close grained cast iron and of sufficient strength, weight and thickness to provide accurate alignment and prevent excessive deflection.

The casing shall be designed to permit the removal of the rotating assembly without disturbing the suction or discharge connections and provided with a large hand hole to permit inspection and cleaning of the pump interior. The hand hole cover shall match the contour of the casing. Three lifting eyes shall be furnished to facilitate handling.

Each casing shall be hydrostatically tested to one and one quarter times the maximum shit off pressure and provided with three-quarter inch vent, drain and gauge connections.

Suction Head – The suction head shall be of the same material as the casing and designed to provide equal flow distribution to the impeller eye. It shall be provided with a flanged connection, a hand hole with removable cover and a one-half inch gauge tap connection.

Impeller – The impeller shall be single stage end suction mixed flow enclosed type with a minimum number of vanes and shall be designed to prevent clogging and to pass solids, trash and stringy materials contained in sewage.

The impellers shall be made of close grained cast iron, accurately machined and polished to remove hollows or projections which might encourage cavitation. Each impeller shall be statically and dynamically balanced prior to assembly.

The impeller shall be secured to the shaft with a key and contoured lock nut which in turn is secured by a locking screw. The arrangement shall be such that the impeller cannot be loosened by torque from either forward or reverse rotation.

Wearing rings – Removable wearing rings of unlike hardness stainless steel shall be furnished on the impeller and suction head and the axis of rotation. They shall be securely fastened to prevent any relative rotation, and designed to compensate for a minimum of one-quarter inch wear. The impeller ring shall be suitable chrome steel and the suction head ring shall be chrome steel and exceed the impeller ring hardness by not less than 50 points Brinell hardness.

Pump Shaft and Sleeve – Pump shafts shall be of heat treated alloy steel of sufficient size to transmit the full driver horsepower with a liberal safety factor and shall be accurately machined over the entire length. The shafts shall be protected from wear in the stuffing box by a hardened chrome steel shaft sleeve sealed to prevent leakage between the sleeve and the shaft.

Stuffing Box – The stuffing box shall be cast integrally with the stuffing box head, designed for a minimum for five rings of packing in addition to a bronze/C.I. seal cage and suitable for clear water or grease sealing. The stuffing box shall be readily accessible and provided with a removable bronze/C.I. gland to facilitate packing replacement (or mechanical seal as specified). The stuffing box head shall be tapped for a three-quarter inch drain connection.

ENGINEERING - DATA

PUMP SIZE	SUCTION SIZE	DISCHARGE SIZE	CASING THICKNESS	MAXIMUM SUCTION PRESSURE Bar	MAXIMUM WORKING PRESSURE (Bar)					MAXIMUM ALLOWABLE HYDROSTATIC TEST PRESSURE FOR PUMPN CASING MATERIAL (Bar)					GD2 OF ROTOR (WET) Kg. M2	BARE PUMP WEIGHT (Kg)
					CAST IRON BRONZE	NI RESIST (D2)	NODULAR CAST IRON	18/10/2 CrNiMo-STEEL	CAST STEEL	CAST IRON BRONZE	NI RESIST (D2)	NODULAR CAST IRON	18/10/2 CrNiMo-STEEL	CAST STEEL		
200 DS 401	250	200	12	4	8	10	12	13	15	12	15	18	19	22	2.0	365
200 DS 552	250	200	12	6	15	20	23	25	27	23	30	35	37	41	8.0	525
250 DS 401	300	250	13	3	8	10	12	13	15	12	15	18	19	22	8.0	485

TEMPERATURES

Maximum operating temperatures depend on pump construction.

BEARING LUBRICATION	PUMP MOUNTING		
	HORIZONTAL FOOT (Deg. C)	HORIZONTAL CENTERLINE (Deg. C)	VERTICAL (Deg. C)
Grease	80	120	120
Oil	80	160 *	

*) with water cooled bearings and stuffing box for temperature exceeding 120 Deg. C.

(1) All dimensions in mm except where specified.

Radially Split, Single Stage, Double Volute End Suction Pump

Product Description Pump Type DS

Pump

Type DS Pumps in standard construction are of horizontal, single stage, single suction, double volute, foot mounted, overhung impeller design.

Spacer type couplings allow full inspection of the back pull out type pump, without disturbing suction and discharge connections or driver position.

End suction and top discharge is the standard configuration. However, following alternative arrangements are available:

- Discharge nozzle in horizontal position, either left or right.
- Centerline support for extreme conditions of service.
- Vertical shaft arrangement (DSV).

Casing

The pump casing is radially split and the suction and discharge nozzles are cast integral with the case. Double volute design for stable operation over a wide range.

Impeller

The impeller is a single suction, closed type, dynamically balanced, keyed to the shaft and secured with a cap and positively locked bolt.

Wearing Rings

In standard construction these pumps are finished without wearing rings. If desired, renewable wearing rings are available for the pump casing as an extra.

Shaft

The large diameter shaft is supported by a cylindrical roller bearing at the pump end and a pair of angular contact ball bearings at the drive end.

Lubrication

Grease lubrication is supplied as the standard. Conversion to oil lubrication can be effected. In this case, the correct oil level would be maintained by a constant-level oiler.

Shaft Sleeve

The hook-type shaft sleeve, locked on the shaft between the impeller hub and shaft shoulder, extends through the stuffing box and is positively driven by the impeller key.

Stuffing Box

The stuffing box with five rings of packing and a lantern ring, upon request, can be converted to “mechanical seal”.

STERLING PUMPS	Radially Split, Single stage, Double Volute End Suction Pump	PUMP MODEL 200 DS 401A
		SPEED 1480 RPM
CURVES BASED ON COLD WATER	CURVE SHEET NO.:	TYPE DS

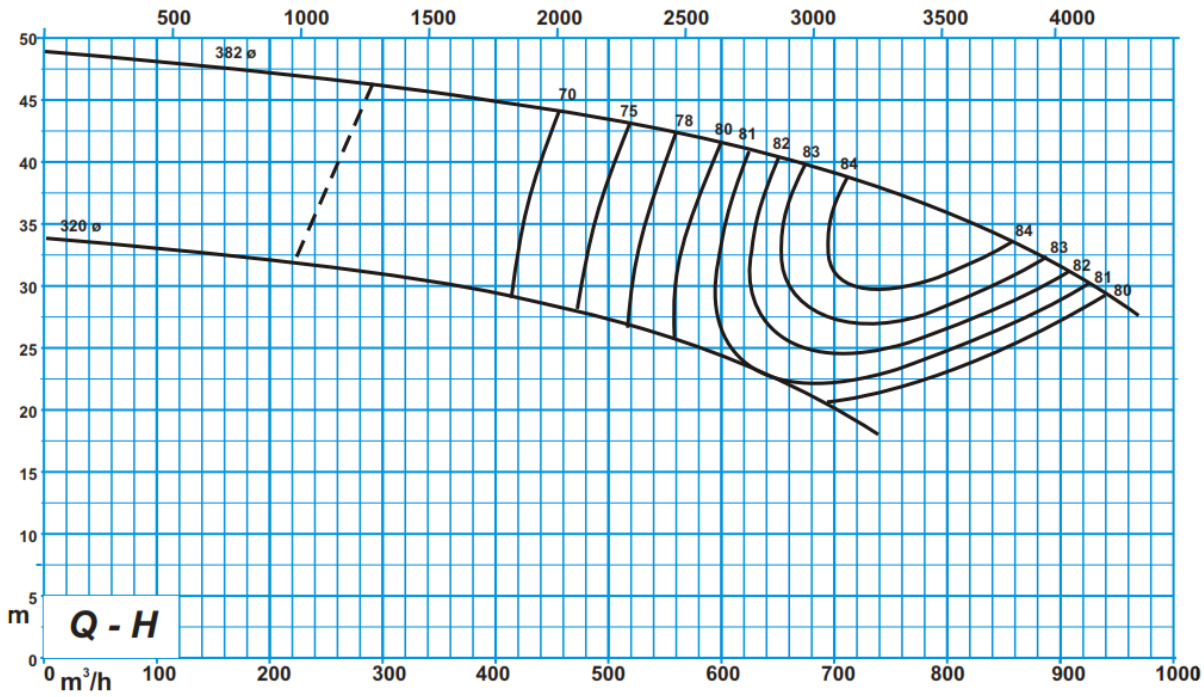

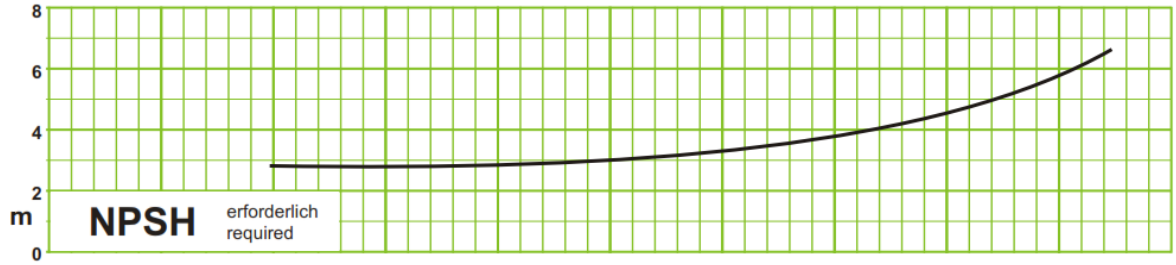

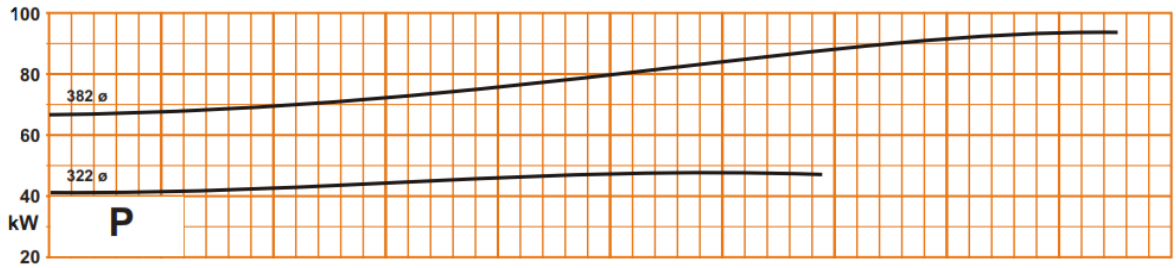

Eye Area total	cm^2	Suction Flange	300mm	12 inches
		Discharge Flange	250mm	10 inches

STERLING PUMPS	Radially Split, Single stage, Double Volute End Suction Pump	PUMP MODEL 200 DS 552A
		SPEED 1480 RPM
CURVES BASED ON COLD WATER	CURVE SHEET NO.:	TYPE DS

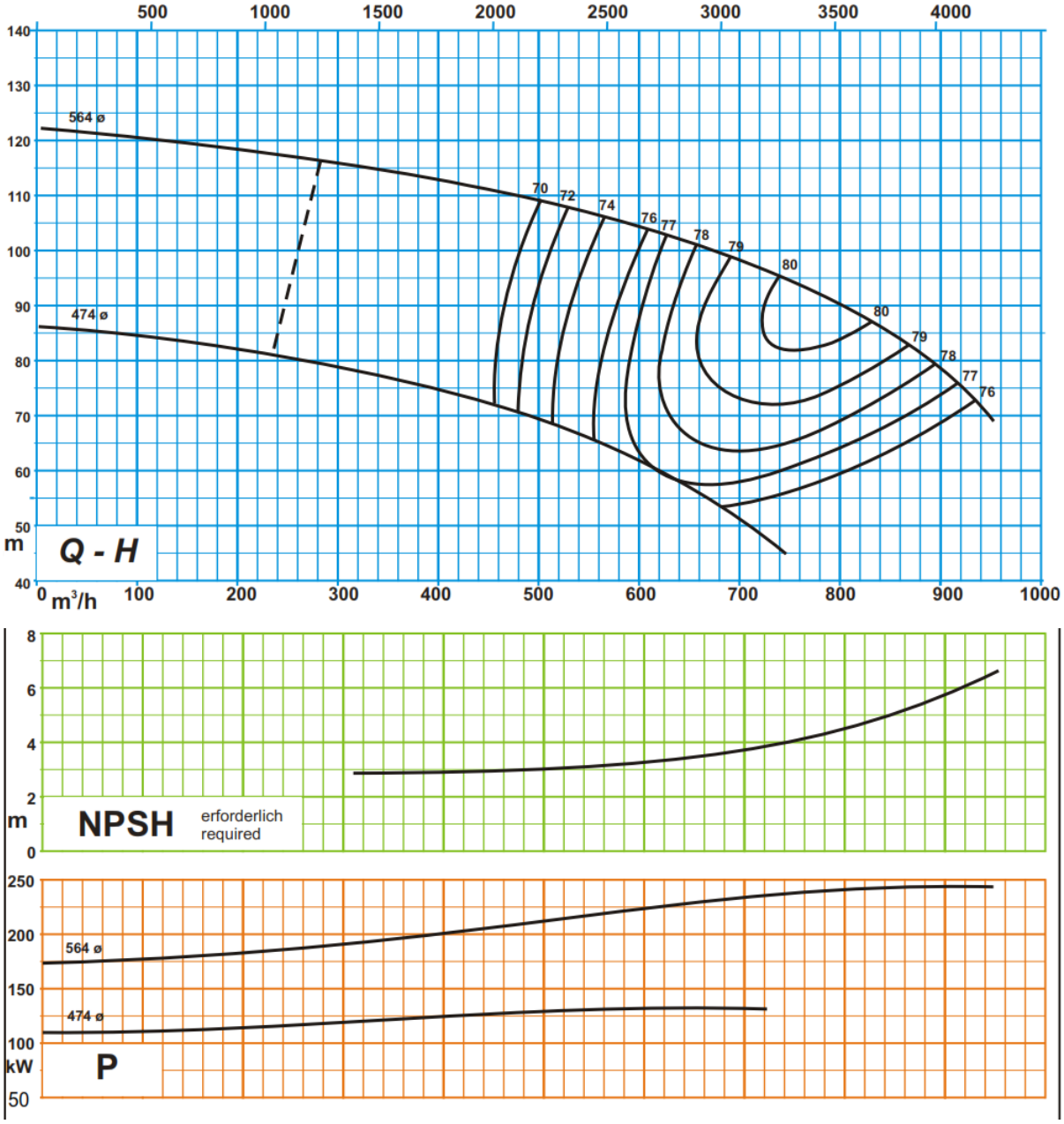

Eye Area total	cm^2	Suction Flange	250mm	10 inches
		Discharge Flange	250mm	8 inches

STERLING PUMPS	Radially Split, Single stage, Double Volute End Suction Pump	PUMP MODEL 250 DS 401A
		SPEED 1480 RPM
CURVES BASED ON COLD WATER	CURVE SHEET NO.:	TYPE DS

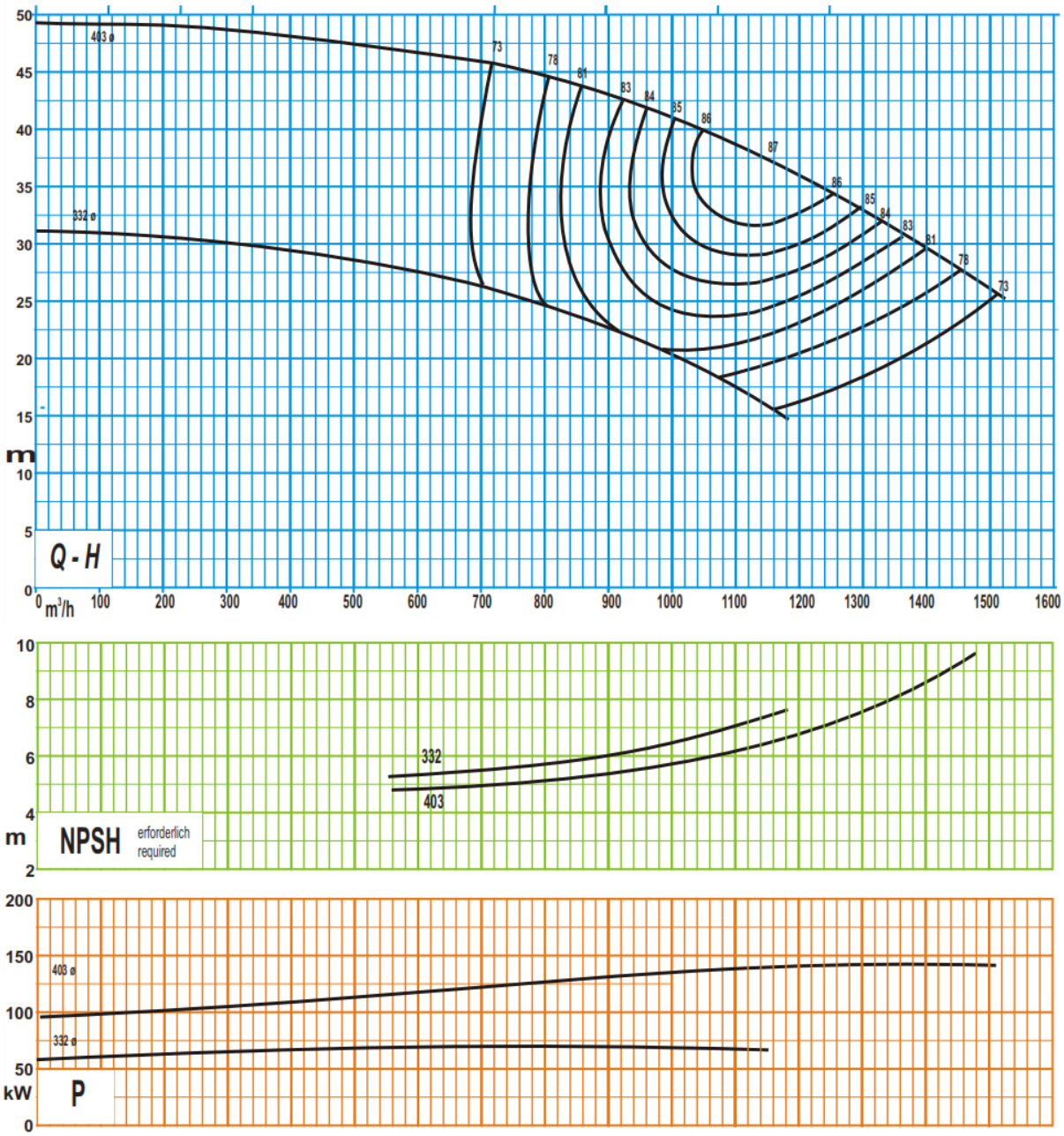

Eye Area total	cm^2	Suction Flange	300mm	12 inches
		Discharge Flange	250mm	10 inches